Bobcat

Rental Condition & Delivery Report for Compact Excavators

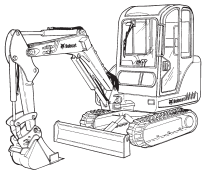

CUSTOMER		DATE	P.O. #
ADDRESS	PHONE	REQUESTED PICK UP DATE	

MODEL #	SERIAL #	UNIT #	HOURMETER READING	
			OUT	IN

✓ Mark Appropriate Box

OUT	IN	CONDITION REPORT	OUT	IN	CONDITION REPORT
		OPERATIONAL CHECKS (Steering/Hydraulic, etc.)			BATTERY/ELECTRICAL SYS/CHARGING
		REAR DOOR (or Engine Cover)			CAB/CAB MOUNTING HARDWARE
		BUCKET AND/OR ATTACHMENT			TRACK TENSION
		SEAT BELT LATCHES PROPERLY			BOOM, ARM, BUCKET AND BLADE CYLINDERS
		SEAT AND/OR CUSHION/ARM REST			RADIATOR CLEAR/COOLANT LEVEL
		SAFETY DECALS/OPERATOR HANDBOOK			HYDRAULIC PUMP AND/OR FILTER
		CONTROL LEVER LOCK AND UPPERSTRUCTURE			HYDRAULIC HOSES AND TUBELINES
		SLEW LOCK FUNCTIONAL			AIR FILTER/HOSE
		X–CHANGE™ SYSTEM (If Equipped)			TRAILER/TIE DOWNS/HITCH/LIGHTS
		SAFETY TREADS/GRAB HANDLES			
		OIL LEVELS (Hyd., Engine Oil)			OTHER:
		FUEL LEVEL			
		WORK LIGHTS (If Equipped)	CHECKED BY	OUT x _____	IN x _____
		LIGHTS: WARNING/HORN, MOTION ALARM (If Equipped)			

COMMENTS OUT: _____

COMMENTS IN: _____

INSTRUCTIONS FOR THE RENTER

Read and understand the following instructions and information below for this machine.

1. _____ I UNDERSTAND THE MACHINE OPERATION AND the need to check for underground utility lines. I am aware of the availibility of additional training materials and videos.

2. _____ Forward motion of the travel lever will always move the excavator in the same direction as blade.

3. _____ **TO LEAVE THE EXCAVATOR:**
   - Lower the boom, blade and put attachment flat on the ground.
   - STOP the engine.
   - Unfasten seat belt.
   - Raise control console.

4. _____ Operate ONLY from the operator seat. Keep feet inside cab.

5. _____ Use seat belt for restraint.

6. _____ This machine has safety signs, decals and Operator's Handbook for operation and maintenance. Owner's and Safety Manuals are available.

7. _____ This Excavator has a lifting capacity and a rated lift capacity chart.

8. _____ I understand how to operate on slopes and to keep attachment **LOW** when traveling.

9. _____ Right side window can be used as an emergency exit.

10. _____ I understand how to use the attachment and dozer. I understand the operation of the X–Change System (If Equipped).

11. _____ A Special Applications Kit is availabile to restrict material from entering cab openings.

12. _____ FOPS, muffler purifiers, motion alarms, lifting chain assemblies and other options are available for job use.

13. _____ I understand the maintenance procedures for this machine.

I understand the operation and maintenance of this machine.

X_____ _____

Customer Signature **Date**

An Ingersoll-Rand business

For Additional Forms Contact Your Bobcat Dealer. This Form Can Also Be Duplicated.

Printed in U.S.A.

CONDITION OUT REPORT

Note any damage to equipment by highlighting the area of the machine and describe the specific damage under comments. Have customer sign in comments section below acknowledging area damaged.

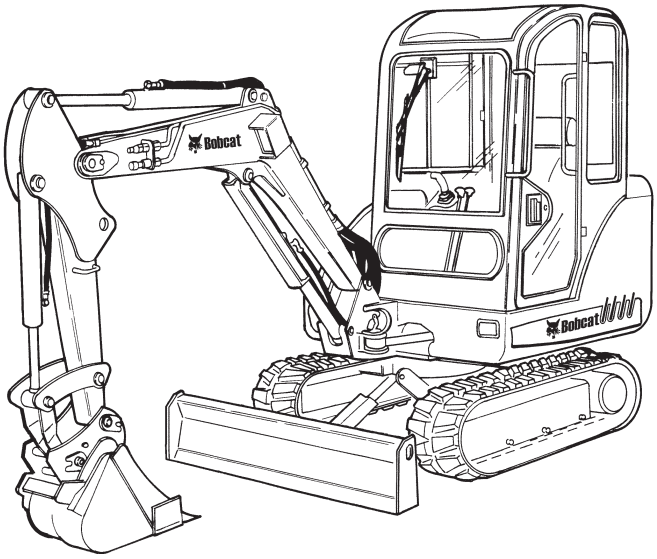

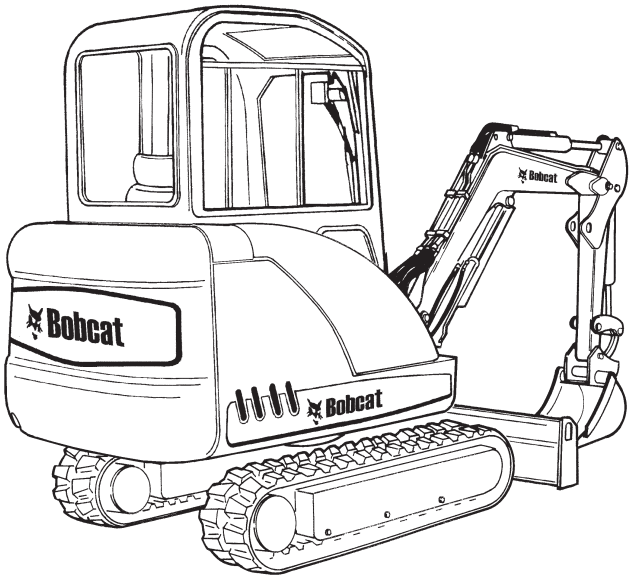

Comments: _____

_____

CONDITION IN REPORT

Note any damage to equipment by highlighting the area of the machine and describe the specific damage under comments. Have customer sign in comments section below acknowledging area damaged.

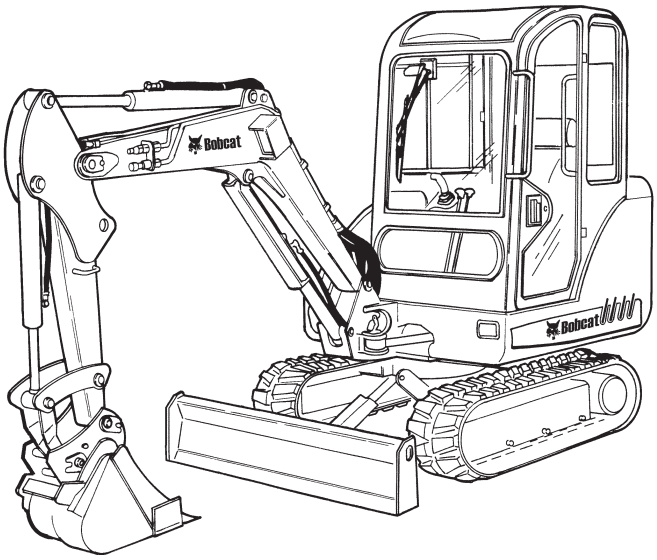

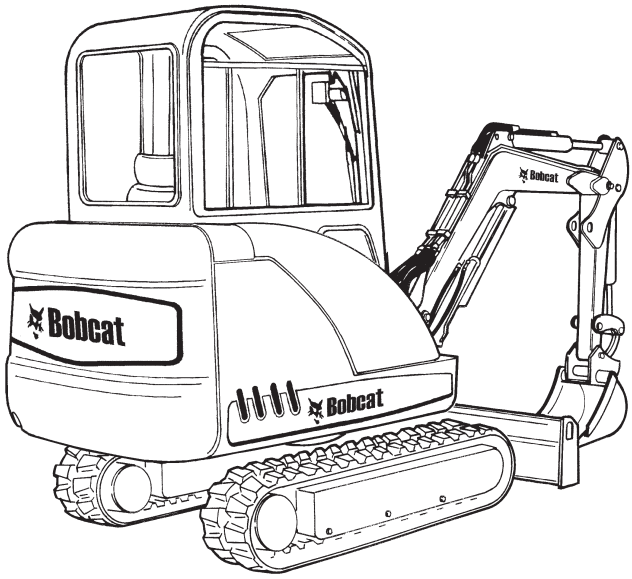

Comments: _____

_____